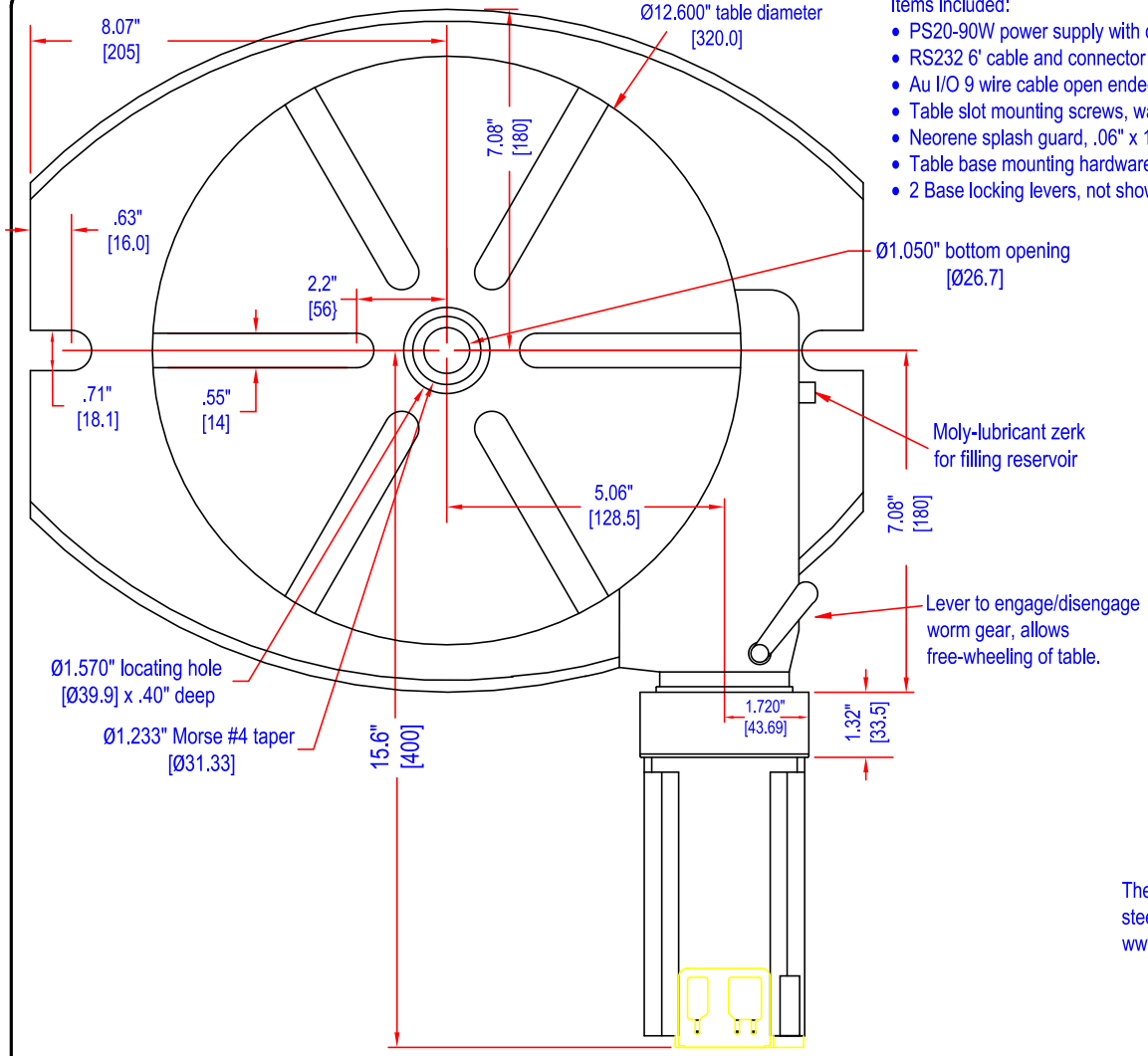

Items included:

- PS20-90W power supply with connector
- RS232 6' cable and connector
- Au I/O 9 wire cable open ended, for external control
- Table slot mounting screws, washers, nuts (6 sets)
- Neorene splash guard, .06" x 12" x 18"
- Table base mounting hardware
- 2 Base locking levers, not shown

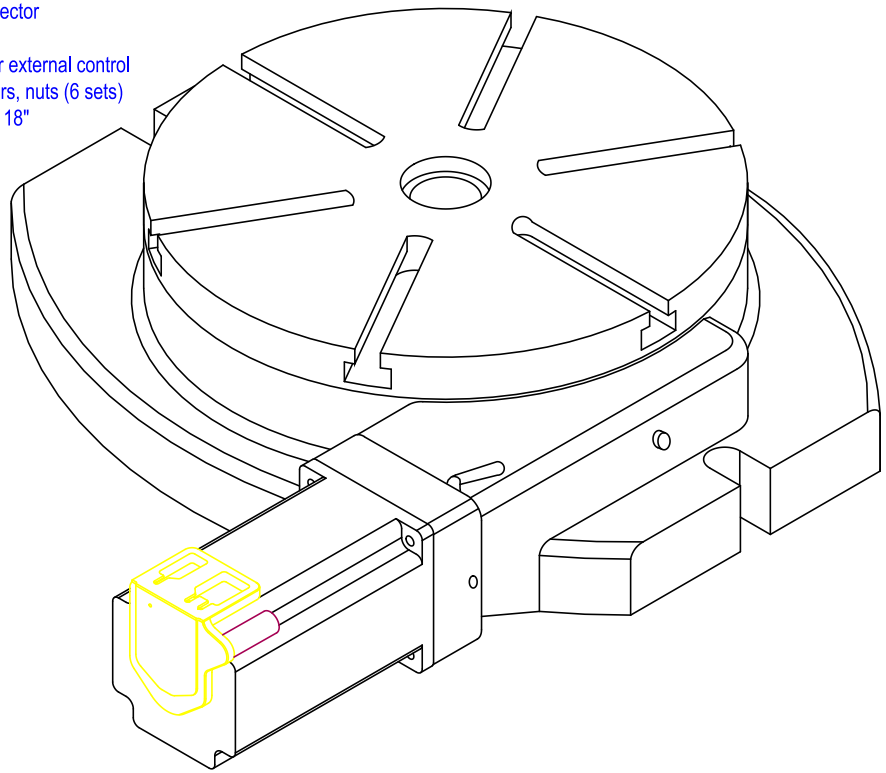

MRT12 Motorized Rotary Table--see Au86 Series drawing for motor and controller details. Unit shown has direct drive and precision ground 90:1 worm gears, and virtually zero backlash.

Theoretical Torque is 4,000 in-lb, practical torque is 3,400 in-lb, more than enough to mill using a Ø1.00 cutter through steel. Top speed of 8,000 motor half-steps/sec gives 15 rpm. Gear drive of 450:1 (2.7 rpm) also available, see www.excitron.com website. Weight is 160 pounds, ships in 2-3 boxes.

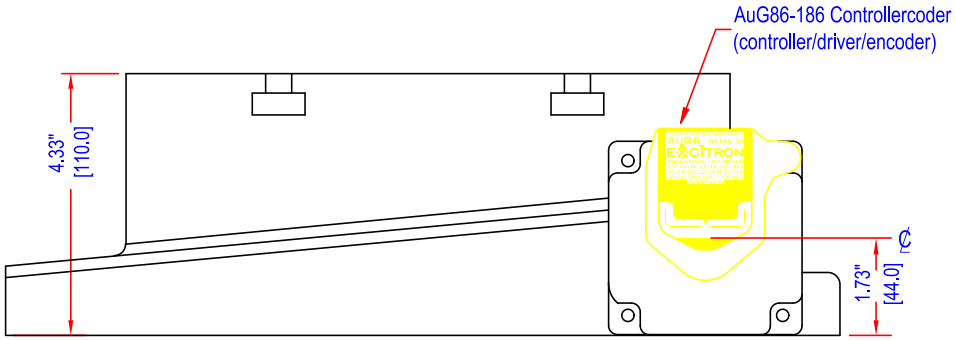

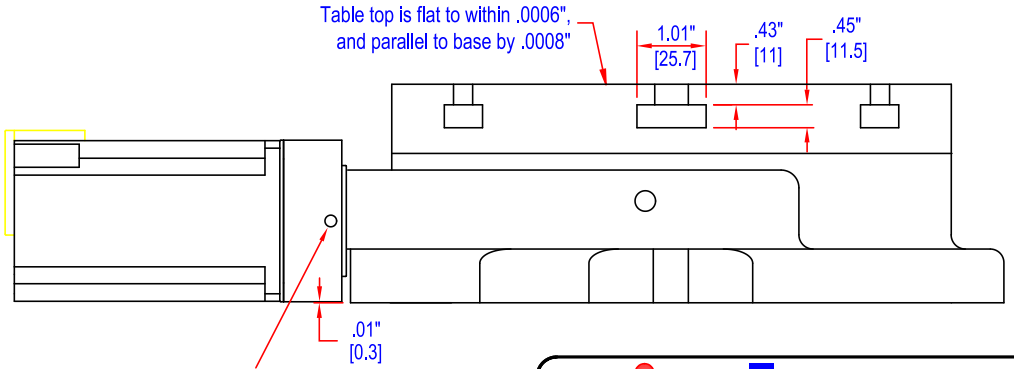

Warning--keep fingers from rotating parts, injury may result. Suggest using the neoprene cover sheet when table is used for machining.

EXCITRON
info@excitron.com 303-859-9476

MRT12-86-156-90

Warning--motors can cause severe injury. *Specifications subject to change without notice.* *Faster Than Fast!®*

08/22/2011	www.excitron.com	~25%	1/1	Rev. A